DOOSAN

www.doosanlift.com

7-Series Electric Forklifts

3,000lb to 4,000lb Capacity
3-wheel and 4-wheel

Lifting Your Dreams

MAIN SPECIFICATIONS

CHARACTERISTICS	1	Manufacturer				DOOSAN		
	2	Model				**B16X-7**	**B18X-7**	**B20X-7**
	3	Load Capacity	at rated load center		lb(kg)	3200 (1600)	3600 (1800)	4000 (2000)
	4	Load Center			in(mm)	24 (500)	24 (500)	24 (500)
	5	Power type				AC Electric	AC Electric	AC Electric
	6	Operator type				Driver Seated	Driver Seated	Driver Seated
	7	Tire type	P= pneumatic, E= solid, C= cushion			P/E	E	E
	8	Wheels (x = driven)	number of front/rear			x 2/2	x 2/2	x 2/2
DIMENSIONS	9	Max. Fork Height	with STD 2-stage mast		in(mm)	130 (3300)	130 (3300)	130 (3300)
	10	Free Lift			in(mm)	5.1 (130)	5.1 (130)	5.3 (135)
	12	Fork carriage	ISO Class			II	II	II
	13	Forks	Thickness x Width x Length		in(mm)	1.4 / 3.9 / 41.3 (35 / 100 / 900)	1.4 / 3.9 / 41.3 (35 / 100 / 900)	1.6 / 3.9 / 41.3 (40 / 100 / 900)
			Fork Spacing (min. x max.)		in(mm)	9.5 / 35.6 (240 / 905)	9.5 / 35.6 (240 / 905)	9.5 / 35.6 (240 / 905)
	14	Tilt of Mast	Forward / Backward		deg	5/7	5/7	5/7
	15	Overall Dimensions	Length to Fork Face		in(mm)	83.4 (2120)	83.4 (2120)	83.6 (2125)
	16		Overall Width		in(mm)	42.9 (1090)	44.1 (1119)	44.1 (1119)
	17		Mast Lowered Height		in(mm)	84.6 (2150)	84.6 (2150)	84.6 (2150)
	18		Mast Extended Height		in(mm)	171 (4345)	171 (4345)	171.3 (4350)
	19		Overhead Guard Height		in(mm)	79 (2010)	79 (2010)	79 (2010)
	20		Seat Height		in(mm)	36.2 (919)	36.2 (919)	36.2 (919)
	21a	Outer Turning Radius			in(mm)	74.2 (1886)	74.2 (1886)	74.2 (1886)
	21b	Inner Turning Radius			in(mm)	19.4 (494)	19.4 (494)	19.4 (494)
	22	Load Moment Center	Center of drive axle to fork face		in(mm)	14.8 (376)	14.8 (376)	15.0 (381)
	23	Right Angle Stacking Aisle Width (with Pallets & Clearance)	48" x 40" (1000 x 1200) Pallet		in(mm)	136.4 (3466)	136.4 (3466)	136.6 (3471)
			48" x 31" (800 x 1200) Pallet		in(mm)	144.3 (3665)	144.3 (3665)	144.5 (3670)
PERFORMANCE	24	Speed	Travel	Loaded / Unloaded	mph(km/h)	10.6 / 10.6 (17 / 17)	10.6 / 10.6 (17 / 17)	10.6 / 10.6 (17 / 17)
	25		Lifting	Loaded / Unloaded	fpm(mm/s)	79 / 118 (400 / 600)	79 / 118 (400 / 600)	79 / 118 (400 / 600)
	26		Lowering	Loaded / Unloaded	fpm(mm/s)	98/89 (500/450)	98/89 (500/450)	98/89 (500/450)
	28	Max. Drawbar pull	Loaded at 1.0 mph		lb(kg)	2864 (1300)	2864 (1300)	2864 (1300)
	30	Max. Gradeability	Loaded at 1.0 mph		%	26	25	24
WEIGHT	32	Total weight	with min. weight of battery		lb(kg)	6858 (3111)	7233 (3281)	7630 (3461)
	33	Axle Load	Loaded, Front / Rear		lb(kg)	9341 / 1045 (4237 / 474)	10033 / 1168 (4551 / 530)	10738 / 1301 (4871 / 590)
	34		Unloaded, Front / Rear		lb(kg)	3748 / 3111 (1700 / 1411)	3739 / 3494 (1696 / 1585)	3730 / 3900 (1692 / 1769)
CHASSIS	35	Tires	Number of Wheels (Front/Rear)			2/2	2/2	2/2
	36		Size	Front		18x7-8 (e)	200x50-10	200x50-10
	37			Rear		16x6-8 (f)	16x6-8	16x6-8
	38	Wheel Base	Distance		in(mm)	58.8 (1495)	58.8 (1495)	58.8 (1495)
	39	Tread Width	Front		in(mm)	35.5 (902)	35.9 (912)	35.9 (912)
			Rear		in(mm)	35 (890)	35 (890)	35 (890)
	40	Ground clearance	Loaded	at lowest	in(mm)	3.4 (86)	3.4 (86)	3.4 (86)
	41			at center of wheel base	in(mm)	3.9 (100)	3.9 (100)	3.9 (100)
	42	Brakes	Service			hydraulic	hydraulic	hydraulic
	43		Parking			auto-electric	auto-electric	auto-electric
POWER TRAIN	45	Battery	Type			lead-acid	lead-acid	lead-acid
			Voltage		V	48	48	48
			Capacity (5 Hours Rating)	Normal	BS type	AH	585	585	585
					DIN type	AH	575	575	575
				Max.	BS type	AH	690	690	690
					DIN type	AH	625	625	625
			Battery compartment sizes (W x L x H) Max.		Normal	in(mm)	25.1 x 39.1 x 27.5 (638 x 992 x 698)	25.1 x 39.1 x 27.5 (638 x 992 x 698)	25.1 x 39.1 x 27.5 (638 x 992 x 698)
					BS Type	in(mm)	25.1 (23.9) x 39.1 x 27.5 (638 (608) x 992 x 698)(c)	25.1 (23.9) x 39.1 x 27.5 (638 (608) x 992 x 698) (c)	25.1 (23.9) x 39.1 x 27.5 (638 (608) x 992 x 698) (c)
					DIN Type	in(mm)	25.1 x 39.1 (33.1) x 27.5 (638 x 992 (842) x 698) (d)	25.1 x 39.1 (33.1) x 27.5 (638 x 992 (842) x 698) (d)	25.1 x 39.1 (33.1) x 27.5 (638 x 992 (842) x 698) (d)
			Min. Weight			lb(kg)	2315 (1,050)	2315 (1,050)	2315 (1,050)
	47	Electric Motors	Drive motor rating at S2 60 minute			kW	6.0 x 2	6.0 x 2	6.0 x 2
	48		Lifting motor rating at S3 15%			kW	14	14	14
	54	Control Type	Drive and Hydraulic			type	AC	AC	AC
	55	Drive Axle	Brake type			type	ODB	ODB	ODB
	57	Relief Pressure	System			psi (kPa)	2880 (19860)	2880 (19860)	3125 (21550)
			Attachment			psi (kPa)	2040 (14000)	2040 (14000)	2040 (14000)

(a) optional: cushion Tires 18x7 - 12.12

(b) optional: cushion Tires 15 x 6 - 11.25

(c) if the operator uses a BS Type Battery (608mm length/575, 630, 690AH/5h capacity), a special accessory (stopper) should be chosen .

(d) if the operator uses a DIN Type Battery (842mm width), a special accessory (bracket) should be chosen.

(e) optional: pneumatic Tires

(f) optional: pneumatic Tires

DOOSAN				
B15T-7	**B18T-7**	**B18TL-7**	**B20T-7**	**B20TL-7**
3000 (1500)	3500 (1750)	3500 (1750)	4000 (2000)	4000 (2000)
24 (500)	24 (500)	24 (500)	24 (500)	24 (500)
AC Electric	AC Electric	AC Electric	AC Electric	AC Electric
Driver Seated	Driver Seated	Driver Seated	Driver Seated	Driver Seated
E/C	E/C	E/C	E/C	E/C
x 2/2	x 2/2	x 2/2	x 2/2	x 2/2
130 (3300)	130 (3300)	130 (3300)	130 (3300)	130 (3300)
5.1 (130)	5.1 (130)	5.1 (130)	5.3 (135)	5.3 (135)
II	II	II	II	II
1.4 / 3.9 / 41.3 (35 / 100 / 900)	1.4 / 3.9 / 41.3 (35 / 100 / 900)	1.4 / 3.9 / 41.3 (35 / 100 / 900)	1.6 / 3.9 / 41.3 (40 / 100 / 900)	1.6 / 3.9 / 41.3 (40 / 100 / 900)
9.5 / 35.6 (240 / 905)	9.5 / 35.6 (240 / 905)	9.5 / 35.6 (240 / 905)	9.5 / 35.6 (240 / 905)	9.5 / 35.6 (240 / 905)
5/7	5/7	5/7	5/7	5/7
74.4 (1891)	78.4 (1991)	83.9 (2132)	79.9 (2029)	84.1 (2137)
42.9 (1090)	42.9 (1090)	42.9 (1090)	44.1 (1119)	44.1 (1119)
84.6 (2150)	84.6 (2150)	84.6 (2150)	84.6 (2150)	84.6 (2150)
171 (4345)	171 (4345)	171 (4345)	171.3 (4350)	171.3 (4350)
79 (2010)	79 (2010)	79 (2010)	79 (2010)	79 (2010)
36.2 (919)	36.2 (919)	36.2 (919)	36.2 (919)	36.2 (919)
59.6 (1515)	63.6 (1615)	69.1 (1756)	64.9 (1648)	69.1 (1756)
-	-	-	-	-
14.8 (376)	14.8 (376)	14.8 (376)	15.0 (381)	15.0 (381)
126.6 (3216)	130.5 (3316)	136.1 (3457)	132 (3354)	136.3 (3462)
131.5 (3341)	135.5 (3441)	141.0 (3582)	137 (3479)	141.2 (3587)
10.6 / 10.6 (17 / 17)	10.6 / 10.6 (17 / 17)	10.6 / 10.6 (17 / 17)	10.6 / 10.6 (17 / 17)	10.6 / 10.6 (17 / 17)
79 / 118 (400 / 600)	79 / 118 (400 / 600)	79 / 118 (400 / 600)	79 / 118 (400 / 600)	79 / 118 (400 / 600)
98/89 (500/450)	98/89 (500/450)	98/89 (500/450)	98/89 (500/450)	98/89 (500/450)
2864 (1300)	2864 (1300)	2864 (1300)	2864 (1300)	2864 (1300)
26	25	25	24	24
6675 (3028)	6927 (3142)	7348 (3333)	7654 (3472)	7348 (3333)
8792 / 1190 (3988 / 540)	9607 / 1177 (4358 / 534)	9638 / 1569 (4372 / 712)	10672 / 1391 (4841 / 631)	10513 / 1243 (4769 / 564)
3296 / 3379 (1495 / 1533)	3373 / 3553 (1530 / 1612)	3604 / 3743 (1635 / 1698)	3578 / 4076 (1623 / 1849)	3604 / 3743 (1635 / 1698)
2/2	2/2	2/2	2/2	2/2
18x7-8 (a)	18x7-8 (a)	18x7-8 (a)	200x50-10 (a)	200x50-10 (a)
15x4.5-8 (b)	15x4.5-8 (b)	15x4.5-8 (b)	16x6-8 (b)	16x6-8 (b)
52 (1323)	56 (1423)	61.2 (1554)	57 (1446)	61.2 (1554)
35.5 (902)	35.5 (902)	35.5 (902)	35.9 (912)	35.9 (912)
6.6 (167)	6.6 (167)	6.6 (167)	7.9 (201)	7.9 (201)
3.4 (86)	3.4 (86)	3.4 (86)	3.4 (86)	3.4 (86)
3.9 (100)	3.9 (100)	3.9 (100)	3.9 (100)	3.9 (100)
hydraulic	hydraulic	hydraulic	hydraulic	hydraulic
auto-electric	auto-electric	auto-electric	auto-electric	auto-electric
lead-acid	lead-acid	lead-acid	lead-acid	lead-acid
48	48	48	48	48
440	510	600	585	600
460	525	690	575	690
575	690	-	690	-
500	625	750	625	750
20.8 x 39.1 x 27.5 (528 x 992 x 698)	25.1 x 39.1 x 27.5 (638 x 992 x 698)	29.4 x 39.1 x 27.5 (746 x 992 x 698)	25.1 x 39.1 x 27.5 (638 x 992 x 698)	29.4 x 39.1 x 27.5 (746 x 992 x 698)
20.8 x 39.1 x 27.5 (528 x 992 x 698)	25.1 (23.9) x 39.1 x 27.5 (638 (608) x 992 x 698) (c)	-	25.1 (23.9) x 39.1 x 27.5 (638 (608) x 992 x 698) (c)	-
20.8 x 39.1 (33.1) x 27.5 (528 x 992 (842) x 698) (d)	25.1 x 39.1 (33.1) x 27.5 (638 x 992 (842) x 698) (d)	29.4 x 39.1 (33.1) x 27.5 (746 x 992 (842) x 698) (d)	25.1 x 39.1 (33.1) x 27.5 (638 x 992 (842) x 698)(d)	29.4 x 39.1 (33.1) x 27.5 (746 x 992 (842) x 698) (d)
700	800	1,000	1,000	1,000
6.0 x 2	6.0 x 2	6.0 x 2	6.0 x 2	6.0 x 2
14	14	14	14	14
AC	AC	AC	AC	AC
ODB	ODB	ODB	ODB	ODB
2550 (17600)	2880 (19860)	2880 (19860)	3125 (21550)	3125 (21550)
2040 (14000)	2040 (14000)	2040 (14000)	2040 (14000)	2040 (14000)

DIMENSIONAL DRAWING - 3-wheel

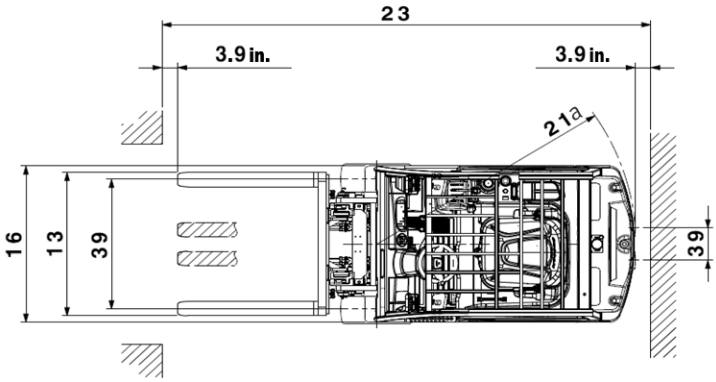

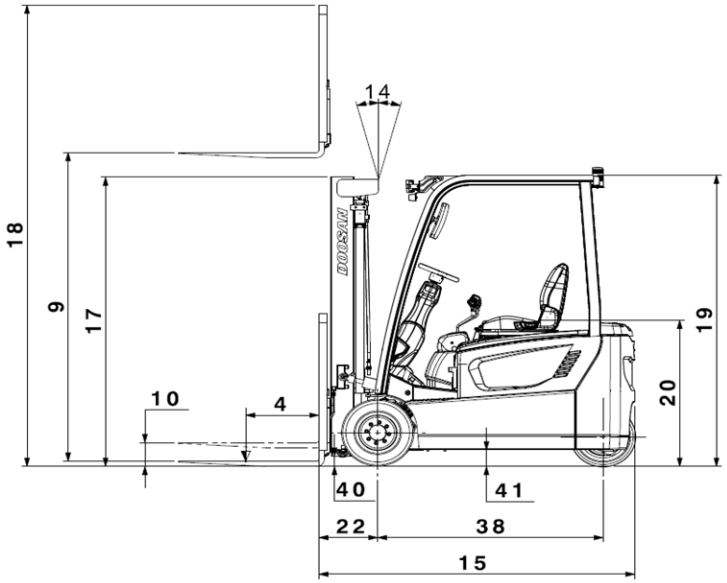

DIMENSIONAL DRAWING - 4-wheel

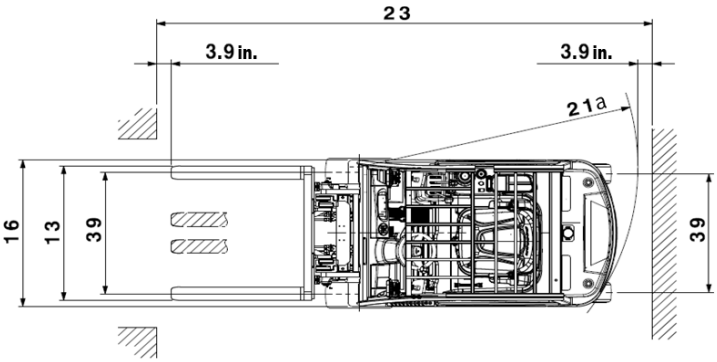

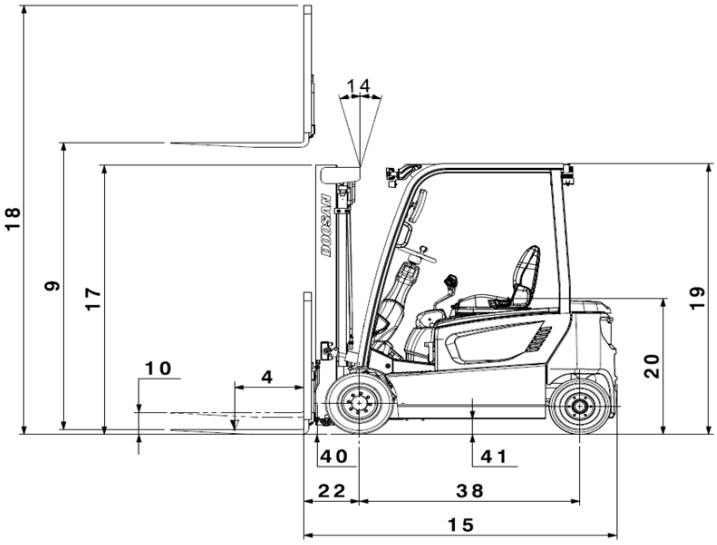

EPB ODB ELECTRIC PARKING BRAKE OIL-COOLED DISC BRAKE

GSS Guardian Stability System

DOOSAN

MAST SPECIFICATIONS and RATED CAPACITIES

B15T-7

Mast type	Maximum Fork Height		Fully Lowered Height		Fully Extended Height				Free Lift				Rated Load Capacities							
					with Load Backrest		without Load Backrest		with Load Backrest		without Load Backrest		Single Solid Tire				Single Cushion Tire			
													Tilt Angle		Load Cap.		Tilt Angle		Load Cap.	
													FWD	BWD	LC 24" (500mm)		FWD	BWD	LC 24" (500mm)	
	in	mm	in	mm	in	mm	in	mm	in	mm	in	mm	deg	deg	lb	kg	deg	deg	lb	kg
STD	118.1	3,000	78.7	2,000	159.3	4,045	141.7	3,600	5.1	130	5.1	130	5	7	3000	1,500	5	7	3000	1,500
	129.9	3,300	84.6	2,150	171.1	4,345	153.5	3,900	5.1	130	5.1	130	5	7	3000	1,500	5	7	3000	1,500
	137.8	3,500	88.6	2,250	178.9	4,545	161.4	4,100	5.1	130	5.1	130	5	7	3000	1,500	5	7	3000	1,500
	145.7	3,700	92.5	2,350	186.8	4,745	169.3	4,300	5.1	130	5.1	130	5	7	3000	1,500	5	7	3000	1,500
	157.5	4,000	100.4	2,550	198.6	5,045	181.1	4,600	5.1	130	5.1	130	5	7	3000	1,500	5	7	3000	1,500
	177.2	4,500	110.2	2,800	218.3	5,545	200.8	5,100	5.1	130	5.1	130	5	7	2850	1,425	5	7	2900	1,450
FF	106.3	2,700	72.8	1,850	147.4	3,745	130.9	3,325	33.3	845	49.8	1,265	5	5	3000	1,500	5	5	3000	1,500
	118.1	3,000	78.7	2,000	159.3	4,045	142.7	3,625	39.2	995	55.7	1,415	5	5	3000	1,500	5	5	3000	1,500
	129.9	3,300	84.6	2,150	171.1	4,345	154.5	3,925	45.1	1,145	61.6	1,565	5	5	3000	1,500	5	5	3000	1,500
FFT	157.5	4,000	74.0	1,880	198.8	5,050	182.3	4,630	34.4	875	51.0	1,295	5	5	2900	1,450	5	5	2950	1,475
	177.2	4,500	80.5	2,045	218.3	5,545	201.8	5,125	40.9	1,040	57.5	1,460	5	5	2800	1,400	5	5	2850	1,425
	187.0	4,750	83.9	2,130	228.1	5,795	211.6	5,375	44.3	1,125	60.8	1,545	5	5	2700	1,350	5	5	2750	1,375
	196.9	5,000	88.4	2,245	238.0	6,045	221.5	5,625	48.8	1,240	65.4	1,660	5	5	2600	1,300	5	5	2700	1,350
	216.5	5,500	97.6	2,480	257.9	6,550	241.3	6,130	58.1	1,475	74.6	1,895	5	5	1950	975	5	5	2550	1,275
	236.2	6,000	104.1	2,645	277.4	7,045	260.8	6,625	64.6	1,640	81.1	2,060	5	5	1300	650	5	5	2450	1,225

B18T-7, B18TL-7

Mast type	Maximum Fork Height		Fully Lowered Height		Fully Extended Height				Free Lift				Rated Load Capacities							
					with Load Backrest		without Load Backrest		with Load Backrest		without Load Backrest		Single Solid Tire				Single Cushion Tire			
													Tilt Angle		Load Cap.		Tilt Angle		Load Cap.	
													FWD	BWD	LC 24" (500mm)		FWD	BWD	LC 24" (500mm)	
	in	mm	in	mm	in	mm	in	mm	in	mm	in	mm	deg	deg	lb	kg	deg	deg	lb	kg
STD	118.1	3,000	78.7	2,000	159.3	4,045	141.7	3,600	5.1	130	5.1	130	5	7	3500	1,750	5	7	3500	1,750
	129.9	3,300	84.6	2,150	171.1	4,345	153.5	3,900	5.1	130	5.1	130	5	7	3500	1,750	5	7	3500	1,750
	137.8	3,500	88.6	2,250	178.9	4,545	161.4	4,100	5.1	130	5.1	130	5	7	3500	1,750	5	7	3500	1,750
	145.7	3,700	92.5	2,350	186.8	4,745	169.3	4,300	5.1	130	5.1	130	5	7	3500	1,750	5	7	3500	1,750
	157.5	4,000	100.4	2,550	198.6	5,045	181.1	4,600	5.1	130	5.1	130	5	7	3500	1,750	5	7	3500	1,750
	177.2	4,500	110.2	2,800	218.3	5,545	200.8	5,100	5.1	130	5.1	130	5	7	3300	1,650	5	7	3300	1,650
FF	106.3	2,700	72.8	1,850	147.4	3,745	130.9	3,325	33.3	845	49.8	1,265	5	5	3500	1,750	5	5	3500	1,750
	118.1	3,000	78.7	2,000	159.3	4,045	142.7	3,625	39.2	995	55.7	1,415	5	5	3500	1,750	5	5	3500	1,750
	129.9	3,300	84.6	2,150	171.1	4,345	154.5	3,925	45.1	1,145	61.6	1,565	5	5	3500	1,750	5	5	3500	1,750
FFT	157.5	4,000	74.0	1,880	198.8	5,050	182.3	4,630	34.4	875	51.0	1,295	5	5	3350	1,675	5	5	3400	1,700
	177.2	4,500	80.5	2,045	218.3	5,545	201.8	5,125	40.9	1,040	57.5	1,460	5	5	3200	1,600	5	5	3300	1,650
	187.0	4,750	83.9	2,130	228.1	5,795	211.6	5,375	44.3	1,125	60.8	1,545	5	5	3050	1,525	5	5	3250	1,625
	196.9	5,000	88.4	2,245	238.0	6,045	221.5	5,625	48.8	1,240	65.4	1,660	5	5	2800	1,400	5	5	3150	1,575
	216.5	5,500	97.6	2,480	257.9	6,550	241.3	6,130	58.1	1,475	74.6	1,895	5	5	2050	1,025	5	5	3000	1,500
	236.2	6,000	104.1	2,645	277.4	7,045	260.8	6,625	64.6	1,640	81.1	2,060	5	5	1400	700	5	5	2800	1,400

B20T-7, B20TL-7

Mast type	Maximum Fork Height		Fully Lowered Height		Fully Extended Height				Free Lift				Rated Load Capacities							
					with Load Backrest		without Load Backrest		with Load Backrest		without Load Backrest		Single Solid Tire				Single Cushion Tire			
													Tilt Angle		Load Cap.		Tilt Angle		Load Cap.	
													FWD	BWD	LC 24" (500mm)		FWD	BWD	LC 24" (500mm)	
	in	mm	in	mm	in	mm	in	mm	in	mm	in	mm	deg	deg	lb	kg	deg	deg	lb	kg
STD	118.1	3,000	78.7	2,000	159.4	4,050	141.9	3,605	5.1	130	5.1	130	5	7	4000	2,000	5	7	4000	2,000
	129.9	3,300	84.6	2,150	171.3	4,350	153.7	3,905	5.1	130	5.1	130	5	7	4000	2,000	5	7	4000	2,000
	137.8	3,500	88.6	2,250	179.1	4,550	161.6	4,105	5.1	130	5.1	130	5	7	4000	2,000	5	7	4000	2,000
	145.7	3,700	92.5	2,350	187.0	4,750	169.5	4,305	5.1	130	5.1	130	5	7	4000	2,000	5	7	4000	2,000
	157.5	4,000	100.4	2,550	198.8	5,050	181.3	4,605	5.1	130	5.1	130	5	7	4000	2,000	5	7	4000	2,000
	177.2	4,500	110.2	2,800	218.5	5,550	201.0	5,105	5.1	130	5.1	130	5	7	3900	1,950	5	7	4000	2,000
FF	106.3	2,700	72.8	1,850	147.6	3,750	131.1	3,330	33.3	845	49.8	1,265	5	5	4000	2,000	5	5	4000	2,000
	118.1	3,000	78.7	2,000	159.4	4,050	142.9	3,630	39.2	995	55.7	1,415	5	5	4000	2,000	5	5	4000	2,000
	129.9	3,300	84.6	2,150	171.3	4,350	154.7	3,930	45.1	1,145	61.6	1,565	5	5	4000	2,000	5	5	4000	2,000
FFT	157.5	4,000	74.0	1,880	199.0	5,055	182.5	4,635	34.4	875	51.0	1,295	5	5	3900	1,950	5	5	4000	2,000
	177.2	4,500	80.5	2,045	218.5	5,550	202.0	5,130	40.9	1,040	57.5	1,460	5	5	3750	1,875	5	5	3950	1,975
	187.0	4,750	83.9	2,130	228.3	5,800	211.8	5,380	44.3	1,125	60.8	1,545	5	5	3650	1,825	5	5	3850	1,925
	196.9	5,000	88.4	2,245	238.2	6,050	221.7	5,630	48.8	1,240	65.4	1,660	5	5	3600	1,800	5	5	3800	1,900
	216.5	5,500	97.6	2,480	258.1	6,555	241.5	6,135	58.1	1,475	74.6	1,895	5	5	3400	1,700	5	5	3600	1,800
	236.2	6,000	104.1	2,645	277.6	7,050	261.0	6,630	64.6	1,640	81.1	2,060	5	5	3150	1,575	5	5	3000	1,500

Note: These load capacities ae based on the standard chassis without side shifter.

Specification values quoted in this catalog have been rounded.
Products and specifications are subject to improvement and change without notice.
Performance may vary due to operating conditions.
The performance shown represents nominal values obtained under typical operating conditions.

B16X-7

Mast type	Maximum Fork Height		Fully Lowered Height		Fully Extended Height				Free Lift				Rated Load Capacities							
					with Load Backrest		without Load Backrest		with Load Backrest		without Load Backrest		Single Solid Tire				Single Cushion Tire			
													Tilt Angle		Load Cap.		Tilt Angle		Load Cap.	
													FWD	BWD	LC 24" (500mm)		FWD	BWD	LC 24" (500mm)	
	in	mm	in	mm	in	mm	in	mm	in	mm	in	mm	deg	deg	lb	kg	deg	deg	lb	kg
STD	118.1	3,000	78.7	2,000	159.3	4,045	141.7	3,600	5.1	130	5.1	130	5	7	3200	1,600	5	7	3200	1,600
	129.9	3,300	84.6	2,150	171.1	4,345	153.5	3,900	5.1	130	5.1	130	5	7	3200	1,600	5	7	3200	1,600
	137.8	3,500	88.6	2,250	178.9	4,545	161.4	4,100	5.1	130	5.1	130	5	7	3200	1,600	5	7	3200	1,600
	145.7	3,700	92.5	2,350	186.8	4,745	169.3	4,300	5.1	130	5.1	130	5	7	3200	1,600	5	7	3200	1,600
	157.5	4,000	100.4	2,550	198.6	5,045	181.1	4,600	5.1	130	5.1	130	5	7	3200	1,600	5	7	3200	1,600
	177.2	4,500	110.2	2,800	218.3	5,545	200.8	5,100	5.1	130	5.1	130	5	7	3200	1,600	5	7	3200	1,600
FF	106.3	2,700	72.8	1,850	147.4	3,745	130.9	3,325	33.3	845	49.8	1,265	5	5	3200	1,600	5	5	3200	1,600
	118.1	3,000	78.7	2,000	159.3	4,045	142.7	3,625	39.2	995	55.7	1,415	5	5	3200	1,600	5	5	3200	1,600
	129.9	3,300	84.6	2,150	171.1	4,345	154.5	3,925	45.1	1,145	61.6	1,565	5	5	3200	1,600	5	5	3200	1,600
FFT	157.5	4,000	74.0	1,880	198.8	5,050	182.3	4,630	34.4	875	51.0	1,295	5	5	3200	1,600	5	5	3200	1,600
	177.2	4,500	80.5	2,045	218.3	5,545	201.8	5,125	40.9	1,040	57.5	1,460	5	5	3100	1,550	5	5	3050	1,525
	187.0	4,750	83.9	2,130	228.1	5,795	211.6	5,375	44.3	1,125	60.8	1,545	5	5	3000	1,500	5	5	2950	1,475
	196.9	5,000	88.4	2,245	238.0	6,045	221.5	5,625	48.8	1,240	65.4	1,660	5	5	2900	1,450	5	5	2900	1,450
	216.5	5,500	97.6	2,480	257.9	6,550	241.3	6,130	58.1	1,475	74.6	1,895	5	5	2700	1,350	5	5	2700	1,350
	236.2	6,000	104.1	2,645	277.4	7,045	260.8	6,625	64.6	1,640	81.1	2,060	5	5	2500	1,250	5	5	2150	1,075

B18X-7

Mast type	Maximum Fork Height		Fully Lowered Height		Fully Extended Height				Free Lift				Rated Load Capacities							
					with Load Backrest		without Load Backrest		with Load Backrest		without Load Backrest		Single Solid Tire				Single Cushion Tire			
													Tilt Angle		Load Cap.		Tilt Angle		Load Cap.	
													FWD	BWD	LC 24" (500mm)		FWD	BWD	LC 24" (500mm)	
	in	mm	in	mm	in	mm	in	mm	in	mm	in	mm	deg	deg	lb	kg	deg	deg	lb	kg
STD	118.1	3,000	78.7	2,000	159.3	4,045	141.7	3,600	5.1	130	5.1	130	5	7	3600	1,800	n/a		n/a	
	129.9	3,300	84.6	2,150	171.1	4,345	153.5	3,900	5.1	130	5.1	130	5	7	3600	1,800				
	137.8	3,500	88.6	2,250	178.9	4,545	161.4	4,100	5.1	130	5.1	130	5	7	3600	1,800				
	145.7	3,700	92.5	2,350	186.8	4,745	169.3	4,300	5.1	130	5.1	130	5	7	3600	1,800				
	157.5	4,000	100.4	2,550	198.6	5,045	181.1	4,600	5.1	130	5.1	130	5	7	3600	1,800				
	177.2	4,500	110.2	2,800	218.3	5,545	200.8	5,100	5.1	130	5.1	130	5	7	3400	1,700				
FF	106.3	2,700	72.8	1,850	147.4	3,745	130.9	3,325	33.3	845	49.8	1,265	5	5	3600	1,800	n/a		n/a	
	118.1	3,000	78.7	2,000	159.3	4,045	142.7	3,625	39.2	995	55.7	1,415	5	5	3600	1,800				
	129.9	3,300	84.6	2,150	171.1	4,345	154.5	3,925	45.1	1,145	61.6	1,565	5	5	3600	1,800				
FFT	157.5	4,000	74.0	1,880	198.8	5,050	182.3	4,630	34.4	875	51.0	1,295	5	5	3600	1,800	n/a		n/a	
	177.2	4,500	80.5	2,045	218.3	5,545	201.8	5,125	40.9	1,040	57.5	1,460	5	5	3500	1,750				
	187.0	4,750	83.9	2,130	228.1	5,795	211.6	5,375	44.3	1,125	60.8	1,545	5	5	3200	1,600				
	196.9	5,000	88.4	2,245	238.0	6,045	221.5	5,625	48.8	1,240	65.4	1,660	5	5	3100	1,550				
	216.5	5,500	97.6	2,480	257.9	6,550	241.3	6,130	58.1	1,475	74.6	1,895	5	5	2950	1,475				
	236.2	6,000	104.1	2,645	277.4	7,045	260.8	6,625	64.6	1,640	81.1	2,060	5	5	2700	1,350				

B20X-7

Mast type	Maximum Fork Height		Fully Lowered Height		Fully Extended Height				Free Lift				Rated Load Capacities							
					with Load Backrest		without Load Backrest		with Load Backrest		without Load Backrest		Single Solid Tire				Single Cushion Tire			
													Tilt Angle		Load Cap.		Tilt Angle		Load Cap.	
													FWD	BWD	LC 24" (500mm)		FWD	BWD	LC 24" (500mm)	
	in	mm	in	mm	in	mm	in	mm	in	mm	in	mm	deg	deg	lb	kg	deg	deg	lb	kg
STD	118.1	3,000	78.7	2,000	159.4	4,050	141.9	3,605	5.1	130	5.1	130	5	7	4000	2,000	n/a		n/a	
	129.9	3,300	84.6	2,150	171.3	4,350	153.7	3,905	5.1	130	5.1	130	5	7	4000	2,000				
	137.8	3,500	88.6	2,250	179.1	4,550	161.6	4,105	5.1	130	5.1	130	5	7	4000	2,000				
	145.7	3,700	92.5	2,350	187.0	4,750	169.5	4,305	5.1	130	5.1	130	5	7	4000	2,000				
	157.5	4,000	100.4	2,550	198.8	5,050	181.3	4,605	5.1	130	5.1	130	5	7	4000	2,000				
	177.2	4,500	110.2	2,800	218.5	5,550	201.0	5,105	5.1	130	5.1	130	5	7	3800	1,900				
FF	106.3	2,700	72.8	1,850	147.6	3,750	131.1	3,330	33.3	845	49.8	1,265	5	5	4000	2,000	n/a		n/a	
	118.1	3,000	78.7	2,000	159.4	4,050	142.9	3,630	39.2	995	55.7	1,415	5	5	4000	2,000				
	129.9	3,300	84.6	2,150	171.3	4,350	154.7	3,930	45.1	1,145	61.6	1,565	5	5	4000	2,000				
FFT	157.5	4,000	74.0	1,880	199.0	5,055	182.5	4,635	34.4	875	51.0	1,295	5	5	3800	1,900	n/a		n/a	
	177.2	4,500	80.5	2,045	218.5	5,550	202.0	5,130	40.9	1,040	57.5	1,460	5	5	3800	1,900				
	187.0	4,750	83.9	2,130	228.3	5,800	211.8	5,380	44.3	1,125	60.8	1,545	5	5	3600	1,800				
	196.9	5,000	88.4	2,245	238.2	6,050	221.7	5,630	48.8	1,240	65.4	1,660	5	5	3450	1,725				
	216.5	5,500	97.6	2,480	258.1	6,555	241.5	6,135	58.1	1,475	74.6	1,895	5	5	3300	1,650				
	236.2	6,000	104.1	2,645	277.6	7,050	261.0	6,630	64.6	1,640	81.1	2,060	5	5	3000	1,500				

Note: These load capacities ae based on the standard chassis without side shifter.

PSCBTBX7-V1specs

Doosan Industrial Vehicle America Corp.
2905 Shawnee Industrial Way
Suwanee, GA 30024
Tel : 770-831-2200
Fax : 770-831-2250
www.doosanlift.com

AUTHORIZED DEALER