HANGCHA

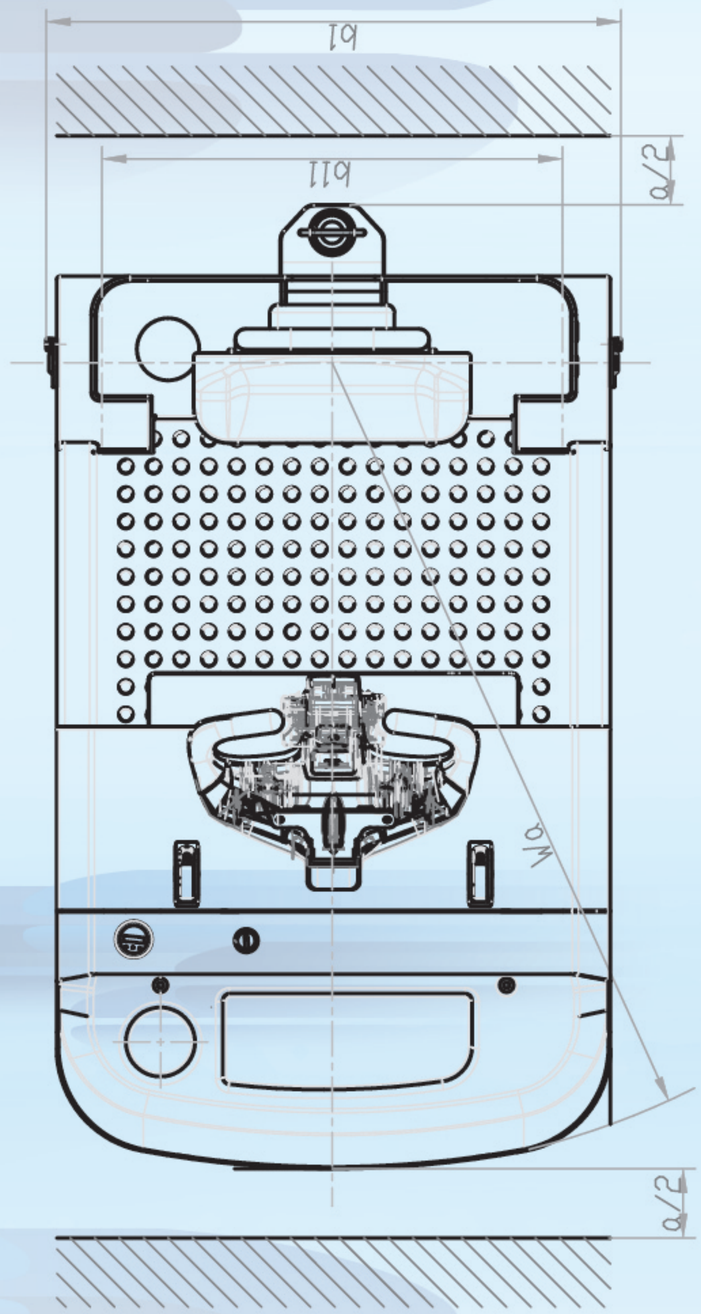

A Series 3/5t Electric Tow Tractor

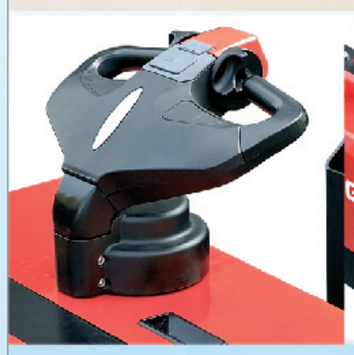

HANGCHA A series 3.0-5.0t electric tow tractor is mainly applied in short-distance transportation among the production lines. Low operator platform for frequent and effortless entry and exit. Thanks to the standing design, it can greatly improve the efficiency of operations. Furthermore, for indoor application, the electric drive system is environmental friendly within the workshop. Therefore, this product is a good partner of automobile manufacturing, logistics companies, warehouses and other places, fields which has broad application prospects.

APPEARANCE

A series 3.0-5.0t electric tow tractor applied professional industrial design, stream lines, and compact, and fully ergonomic consideration, in line with the latest design trends

Applied steel stamping and injection molding processes for front and back guard, which is robust, durable, and also environmental compliance.

HIGH PERFORMANCE

Electric power steering is standard specification, which provides flexible operation

Powered by AC traction motor not only has good acceleration and climbing performance, but also low heat, brushless, maintenance-free.

Latest AC CURTIS control system, precise and smooth

CAN-BUS connection enables all truck data can be read out for inspection, and also improves the data transition more quick and reliable

Regenerative braking for battery recovery during travel speed reduction, anti-slope on gradient

All key parts such as switches, connectors, battery indicator and hour meter all adopt the famous brand.

HANGCHA GROUP CO., LTD. ZHEJIANG HANGCHA IMP. & EXP. CO., LTD.
FACTORY SITE: No.88,Donghuan Rd.,Lin'an Economic Development Zone, Zhejiang,China (311305)
Tel: +86-571-88926737 Fax: +86-571-88926789 88132890 Email: sales@hcforklift.com Website: www.hcforklift.com

Products are subject to change without notice, illustration not binding for actual constructions.

HANGCHA

COMFORT

- The pedal applies shock absorption design, greatly improve the operator's comfort, reduce the fatigue
- Backrest height can be adjusted within a certain range, and the backrest with hip support can greatly improve the comfort of the operator.
- Sideway change battery is the standard specification.
- The inching switches installed at the LH/RH side, greatly improve the ease of operation.
- The easy to reached storage space is convenient for the operator.
- Compact size, light weight and flexible, extremely easy to operate, can easily go through even in a compact space.

RELIABILITY

- 3-pivot and side support bar system design ensure the safe and reliability
- Imported waterproof connectors, all wires and cables are protected, greatly improve the reliability of the electric system
- Safety switch of pedal using non-contact proximity switch, improves safety and reliability.
- Though sideway battery change is standard specification, fixed in safe and reliable way.

SAFETY

- Automatic deceleration during turning.
- Pedal has a safety switch, which can effectively prevent mis-operation
- Three braking system of regenerative braking, reverse current braking, parking brake, insures the safe operation.
- Steel front shield assures excellent safety for the operation.

MAINTENANCE

- AC motor without carbon brushes, maintenance-free, cost saving
- Integrated battery indicator, hour meter and self-diagnostic instrument
- Full opened hood, easy accessibility of all components, is easy for service.
- All shafts are equipped with shaft sleeve and oil cup, easy maintenance, prolong service life.

STANDARD SPECIFICATION

- AC drive motor
- CURTIS controller
- Electric steering system
- Inching switch(LH/RH)
- Emergency cut off switch
- Stand-on pedal with shock absorber
- Adjustable supportive backrest
- Sideway change battery
- Battery indicator
- PU wheel
- Multi-function handlebar
- Horn
- Tool box
- Standard lead-acid battery

OPTIONS

- Rubber wheel
- Warning light
- Working light
- Handrail
- Big capacity battery
- Anti-collision bumper
- Different height of towing coupling
- Review Mirror

CE CERTIFICATE

SO14001

ISO9001

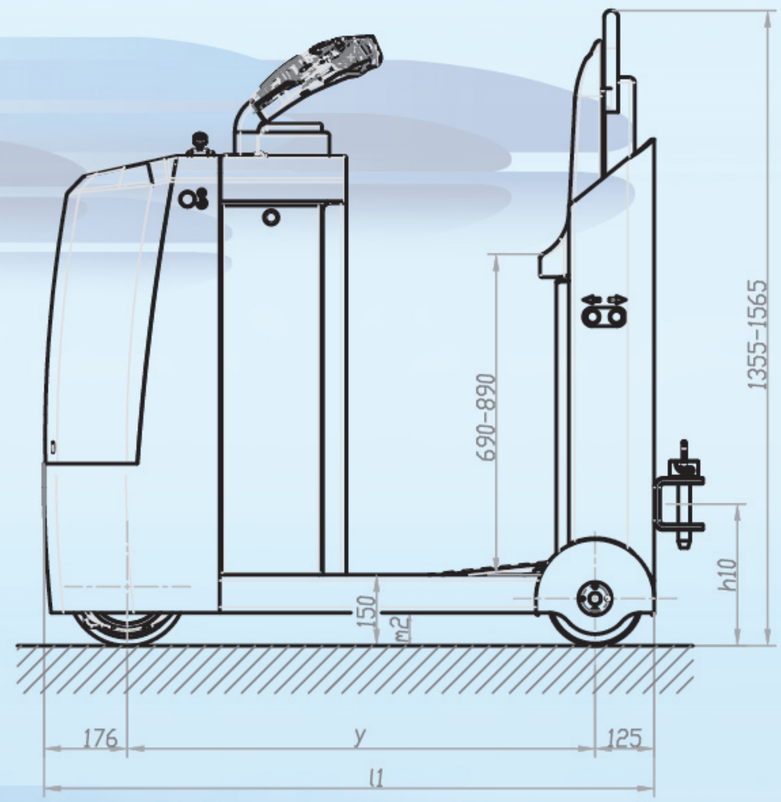

A series electric tow tractor

Distinguishing mark	1.1	Manufacturer		HANGCHA GROUP CO.,LTD.	
	1.2	Manufacturer's type designation		QDD3-ASC1	QDD5-ASC1
	1.3	Drive		electric	electric
	1.4	Operator type: hand, pedestrian, standing, seated, order-picker		standing	standing
	1.5	Load capacity/rated load	Q (kg)	3000	5000
	1.7	Rated drwabar pull	F(N)	600	1000
	1.9	Wheelbase	y (mm)	957	978
Weights	2.1	Service Weight	kg	900	1000
	2.3	Axle loading, front/rear	kg	610/290	700/300
Wheels, Chassis	3.1	Tyres: solid rubber, superelastic, pneumatic, polyurethane		PU	PU
	3.2	Tyre size, front	mm	Φ230×75	Φ250×100
	3.3	Tyre size, rear	mm	Φ200×100	Φ200×100
	3.5	Wheels, number front /rear (x=drive wheels)		1×/2	1×/2
	3.7	Track width, rear	b_{11}(mm)	665	665
Dimensions	4.8	Seat height/stand height	h_7(mm)	150	150
		Overall length(without traction pin)	l_1(mm)	1289	1289
	4.21	Overall width	b_1(mm)	830	830
	4.32	Ground clearance, centre of wheelbase	m_2(mm)	70	70
	4.35	Turning radius	W_a(mm)	1172	1172
Performance Data	5.1	Travel speed, laden/unladen	km/h	7.0/10.0	7.0/10.0
	5.5	Rated drawbar pull	N	600	1000
	5.6	Max. drawbar pull	N	2400	3200
	5.7	Gradeability, laden	%	4	4
	5.10	Service brake		electronmagnetic	electronmagnetic
E-Motor	6.1	Drive motor rating S_2 60 min.	kW	2.2	3
	6.4	Battery voltage,rated capacity(STD.)	V/Ah	24/270	24/360
		Battery voltage,rated capacity(OPT.)	V/Ah	24/360	24/450
Others	8.1	Type of drive control		AC CURTIS	AC CURTIS

Specifications are subject to change without notice.